AD-10 Shock

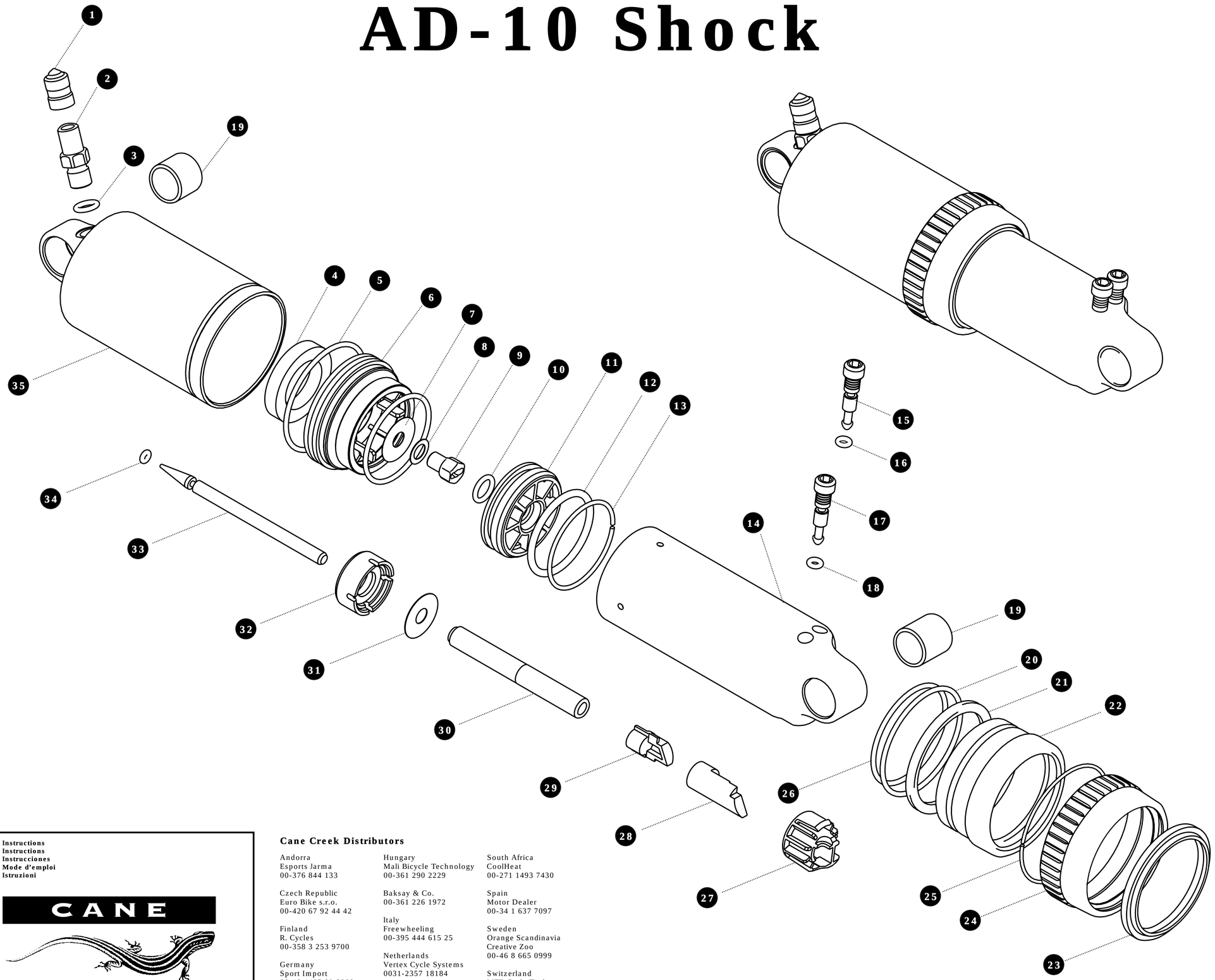

Instructions
Instructions
Instrucciones
Mode d'emploi
Istruzioni

CANE CREEK

AD-10

Cane Creek Distributors

Andorra
Esports Jarma
00-376 844 133

Czech Republic
Euro Bike s.r.o.
00-420 67 92 44 42

Finland
R. Cycles
00-358 3 253 9700

Germany
Sport Import
00-49 4405 92 8000

Greece
Gatsoulls
00-301 251 2779

Hungary
Mali Bicycle Technology
00-361 290 2229

Baksay & Co.
00-361 226 1972

Italy
Freewheeling
00-395 444 615 25

Netherlands
Vertex Cycle Systems
0031-2357 18184

Norway
Foss Bikes
00-472 238 2644

Portugal
LPL
00-351 148 35 354

South Africa
CoolHeat
00-271 1493 7430

Spain
Motor Dealer
00-34 1 637 7097

Sweden
Orange Scandinavia
Creative Zoo
00-46 8 665 0999

Switzerland
MTB Cycle Tech
41-31-972-5572

United Kingdom
Caratti Sport
00-44 1454 201 700

All other inquiries:
Active Sports Products
+31 181 318033

AD-10 Exploded Shock

1. Valve Cap (AD0124)
2. Air Valve (AD0101)
3. O-Ring (AD0111)
4. Bumper (AD0102)
5. O-ring (AD0303)
6. Piston (AD0316)
7. Valve Shim
   [AD0130 (thin) AD0132 (thick)]
8. Washer (AD0135)
9. Valve Screw (AD0122)
10. O-ring (AD0106)
11. Volume Adjustment Plate (AD0311)
12. O-ring (AD0110)
13. Retaining Ring (AD0305)
14. Piston Shaft
15. Adjuster Knob (silver) (AD0139)
16. O-ring (AD0140)
17. Adjuster Knob (black) (AD0140)
18. O-ring (AD0126)
19. Bushing
20. O-ring (AD0108)
21. Quad Ring (AD0301)
22. Seal Bushing
23. Rod Wiper (AS0125)
24. Lock Ring (AD0313)
25. Wire Ring (AD0306)
26. O-ring (AD0108)
27. Ramp Housing (AD0141)
28. Compression Ramp (AD0159)
29. Rebound Ramp (AD0149)
30. Compression Rod
31. Valve Shim(AD0132)
32. Compression Cylinder (AD0158)
33. Rebound Rod
34. O-ring (AD0125)
35. Large Cylinder

AD-10 Explosionszeichnung

1. Ventilkappe (AD0124)
2. Luftventil (AD0101)
3. O-Ring Dichtung (AD0111)
4. Anschlag (AD0102)
5. O-Ring Dichtung (AD0303)
6. Kolben (AD0316)
7. Ventil-Unterlegscheibe
   [AD0130 (dick) AD0132 (dünn)]
8. Unterlegscheibe (AD0135)
9. Ventilschraube (AD0122)
10. O-Ring Dichtung (AD0106)
11. Platte zum Einstellen des Luftvolumens (AD0311)
12. O-Ring Dichtung (AD0110)
13. Sprengring (AD0305)
14. Kolbenstange
15. Einstellknopf (silber) (AD0139)
16. O-Ring Dichtung (AD0126)
17. Einstellknopf (schwarz) (AD0140)
18. O-Ring Dichtung (AD0126)
19. Lagerhülse
20. O-Ring Dichtung (AD0108)
21. Quad Ring (AD0301)
22. Dichtungshülse
23. gleitende Dichtung (AS0125)
24. Konterring, Drahtring (AD0313)
25. Drahtring (AD0306)
26. O-Ring Dichtung (AD0108)
27. Rampengehäuse (AD0141)
28. Druckstufen-Rampe (AD0159)
29. Zugstufen-Rampe (AD0149)
30. Druckstufen-Stange
31. Ventil-Unterlegscheibe (AD0132)
32. Druckstufen-Zylinder (AD0158)
33. Zugstufen-Stange
34. O-Ring Dichtung (AD0125)
35. großer Zylinder

Diagrama de despiece del AD-10:

1. casquillo de válvula (AD0124)
2. válvula de aire (AD0101)
3. junta tórica (AD0111)
4. tope (AD0102)
5. junta tórica (AD0303)
6. pistón (AD0316)
7. diafragma de válvula
   AD0130 (fino) AD0132 (grueso)
8. arandela (AD0135)
9. tornillo de válvula (AD0122)
10. junta tórica (AD0106)
11. placa de ajuste de volumen (AD0311)
12. junta tórica (AD0110)
13. arandela de fijación (AD0305)
14. eje del pistón
15. mando de ajuste (plateado) (AD0139)
16. junta tórica (AD0126)
17. mando de ajuste (negro) (AD0140)
18. junta tórica (AD0126)
19. rodamiento
20. junta tórica (AD0108)
21. arandela de sección cuadrada (AD0301)
22. rodamiento de sellado
23. anillo de fricción (AS0125)
24. arandela de bloqueo (AD0313)
25. arandela de alambre (AD0306)
26. junta tórica (AD0108)
27. alojamiento de la rampa (AD0141)
28. rampa de compresión (AD0159)
29. rampa de rebote (AD0149)
30. varilla de compresión
31. diafragma de válvula (AD0132)
32. cilindro de compresión (AD0158)
33. varilla de rebote
34. junta tórica (AD0125)
35. cilindro grande

AD-10 Vue éclatée

1. capuchon de valve (AD0124)
2. valve pneumatique (AD0101)
3. joint torique (AD0111)
4. butée de ressort (AD0102)
5. joint torique (AD0303)
6. piston (AD0316)
7. rondelle de valve
   AD0130 (mince) AD0132 (épaisse)
8. rondelle (AD0135)
9. vis pointeau (AD0122)
10. joint torique (AD0106)
11. plaque de réglage de volume AD0311
12. joint torique (AD0110)
13. circlip d'arrêt (AD0305)
14. tige de piston
15. bouton de réglage (argent) (AD0139)
16. joint torique (AD0126)
17. bouton de réglage (noir) (AD0140)
18. joint torique (AD0126)
19. gaine
20. joint torique (AD0108)
21. joint Quad ring (AD0301)
22. gaine de joint
23. wiper de tige (AS0125)
24. circlip (AD0313)
25. bague métallique (AD0306)
26. joint torique (AD0108)
27. enveloppe de rampe (AD0141)
28. rampe de compression (AD0159)
29. rampe de rebond (AD0149)
30. tige de compression
31. rondelle de valve (AD0132)
32. cylindre compresseur (AD0158)
33. tige de rebond
34. joint torique (AD0125)
35. grand cylindre

AD-10 Descrizione dell'esploso

1. coperchio valvola (AD0124)
2. valvola dell'aria (AD0101)
3. joint torique (AD0111)
4. ammortizzatore (AD0102)
5. O-ring (AD0303)
6. pistone (AD0316)
7. spessore valvola
   AD0130 (sottile) AD0132 (grosso)
8. rondella (AD0135)
9. vite valvola (AD0122)
10. O-ring (AD0106)
11. piastra di registro volume AD0311
12. O-ring (AD0110)
13. anello di ritenzione (AD0305)
14. stelo pistone
15. bouton de réglage (argento) (AD0139)
16. O-ring (AD0126)
17. manopola di registro (noir) (AD0140)
18. O-ring (AD0126)
19. boccola
20. O-ring (AD0108)
21. anello quadrangolare (AD0301)
22. boccola di tenuta
23. paraolio asta (AS0125)
24. anello di bloccaggio (AD0313)
25. anello metallico (AD0306)
26. O-ring (AD0108)
27. alloggiamento rampa (AD0141)
28. rampa di compressione (AD0159)
29. rampa di ritorno (AD0149)
30. asta di compressione
31. spessore valvola (AD0132)
32. cilindro di compressione (AD0158)
33. asta di ritorno
34. O-ring (AD0125)
35. cilindro grande